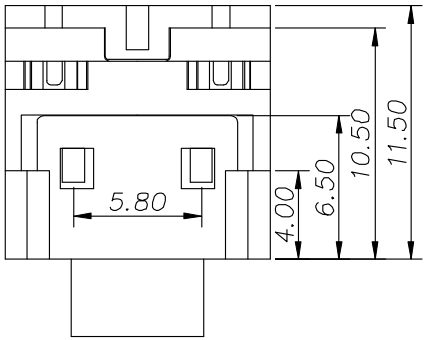

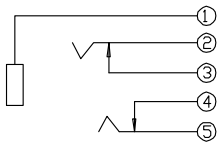

SCHEMATIC

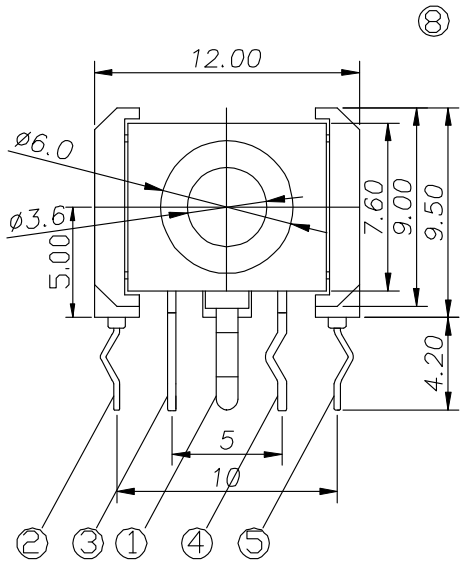

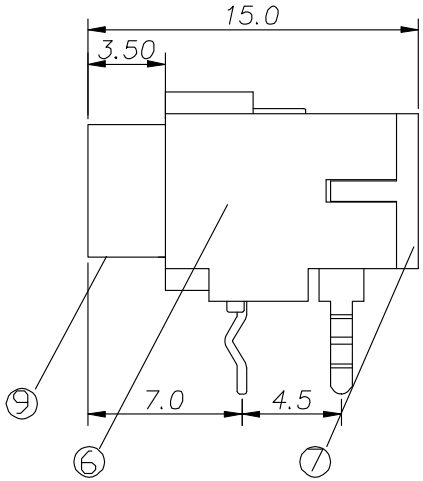

P.C.B LAYOUT TOPVIEW

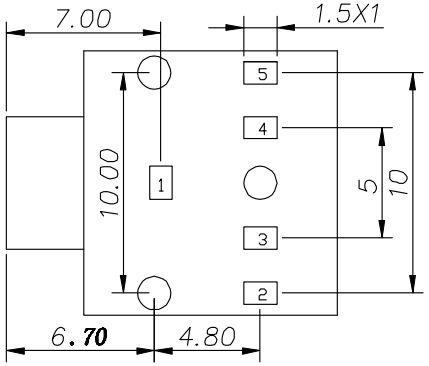

DONGGUAN LANGDUN ELECTRONIC CO., LTD.

TITLE : PHONE JACK

MODEL : PJ-306

UNIT :	MM	DWN.		DATE	
SCALE :	4 : 1	CHK'D		DATE	
VERSION	01	APPD.		DATE	

TOLERANCE	ANGLE TOL
<=5mm ±0.1 > 5mm ±0.2	±2°

NO.	PART NAME	MATERIAL	QTY.	FINISHING
3	TERMINAL B\C	PBS STRIP t=0.2mm	2	Ag PLATED
2	TERMINAL D	BRASS STRIP t=0.4mm	1	Ag PLATED
1	HOUSING	PBT	1	BLACK/GREEN