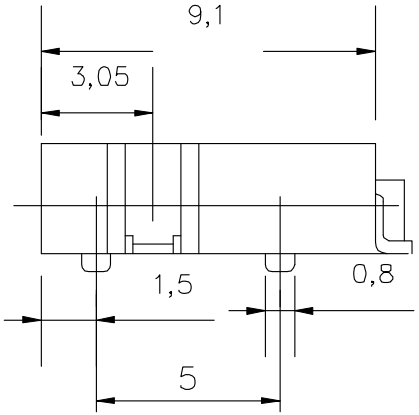

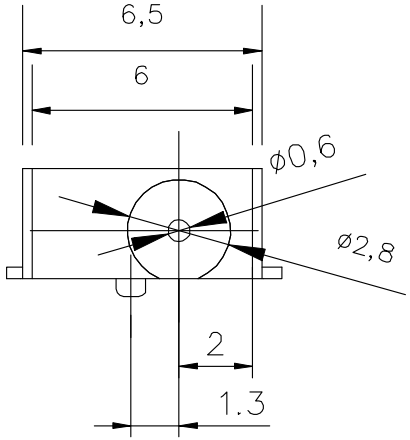

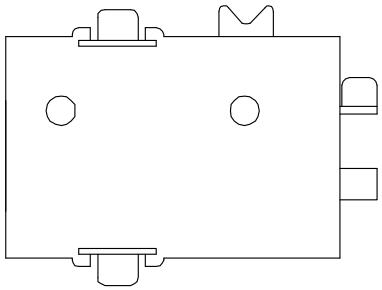

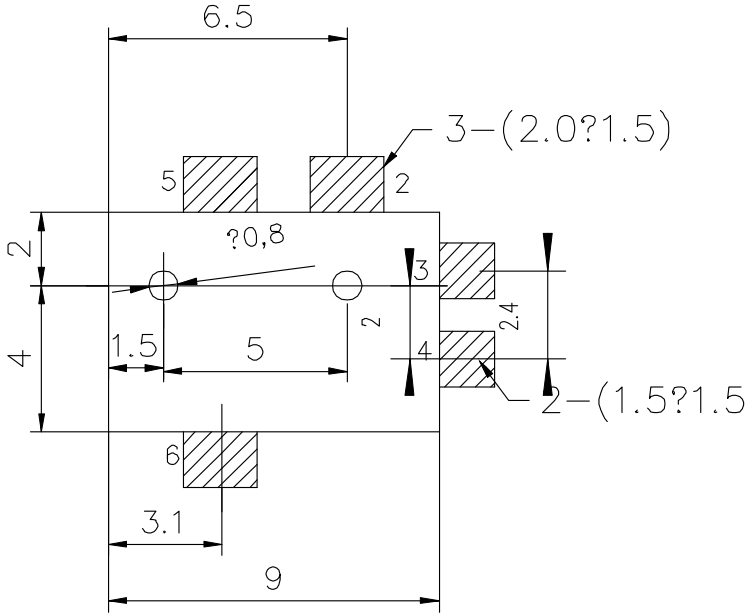

HOLE LAYOUT

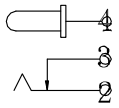

SCHEMATIC

DONGGUAN LANGDUN ELECTRONIC CO., LTD.

TITLE : DC POWER JACK

MODEL : DC-056

UNIT :	MM	DWN.		DATE	
SCALE :	4 : 1	CHK'D		DATE	
VERSION	01	APPD.		DATE	

TOLERANCE	ANGLE TOL
<=5mm ±0.1 > 5mm ±0.2	±2°

NO.	PART NAME	MATERIAL	QTY.	FINISHING
5	TERMINAL C	BRASS STRIP	2	Ag PLATED
4	TERMINAL B	PBS STRIP	1	Ag PLATED
3	TERMINAL A	BRASS STRIP	2	Ag PLATED
2	PIN	BRASS	1	Ag PLATED
1	CASE	NYLON	1	BLACK